| 呼び径 | d | L | L1 | J10K | | J20K | | H | 質量 (kg) | Cv値 | 操作機型式 | | | ﾗﾝｸ |
|---|---|---|---|---|---|---|---|---|---|---|---|---|---|---|
| | | | | C | n-h | C | n-h | | | | | | | |
| 15 A | 15 | 40 | 20 | 70 | 4-15 | 70 | 4-15 | 300 | 6.8 | 20 | PHX-300 | PHR-300 | PDX-300 | 0 |
| 20 A | 20 | 50 | 25 | 75 | 4-15 | 75 | 4-15 | 302 | 7 | 36 | PHX-300 | PHR-300 | PDX-300 | 0 |
| 25 A | 25 | 60 | 30 | 90 | 4-19 | 90 | 4-19 | 311 | 7.5 | 50 | PHX-300 | PHR-300 | PDX-300 | 0 |
| 32 A | 32 | 70 | 35 | 100 | 4-19 | 100 | 4-19 | 315 | 8 | 90 | PHX-300 | PHR-300 | PDX-300 | 0 |
| 40 A | 40 | 80 | 40 | 105 | 4-19 | 105 | 4-19 | 338 | 9.1 | 120 | PHX-300 | PHR-300 | PDX-300 | 0 |
| | | | | | | | | | 9.3 | | PHX-700 | PHR-700 | PDX-700 | 2 |
| 50 A | 50 | 95 | 45 | 120 | 4-19 | 120 | 8-19 | 346 | 11 | 220 | PHX-700 | PHR-700 | PDX-700 | 0 |
| 65 A | 64 | 110 | 52 | 140 | 4-19 | 140 | 8-19 | 370 | 15 | 380 | PHX-700 | PHR-700 | PDX-700 | 0 |
| 80 A | 74 | 125 | 61 | 150 | 8-19 | 160 | 8-23 | 377 | 17 | 750 | PHX-700 | PHR-700 | PDX-700 | 0 |
| | | | | | | | | 399 | 18 | | PHX-02K | PHR-02K | PDX-02K | 2 |

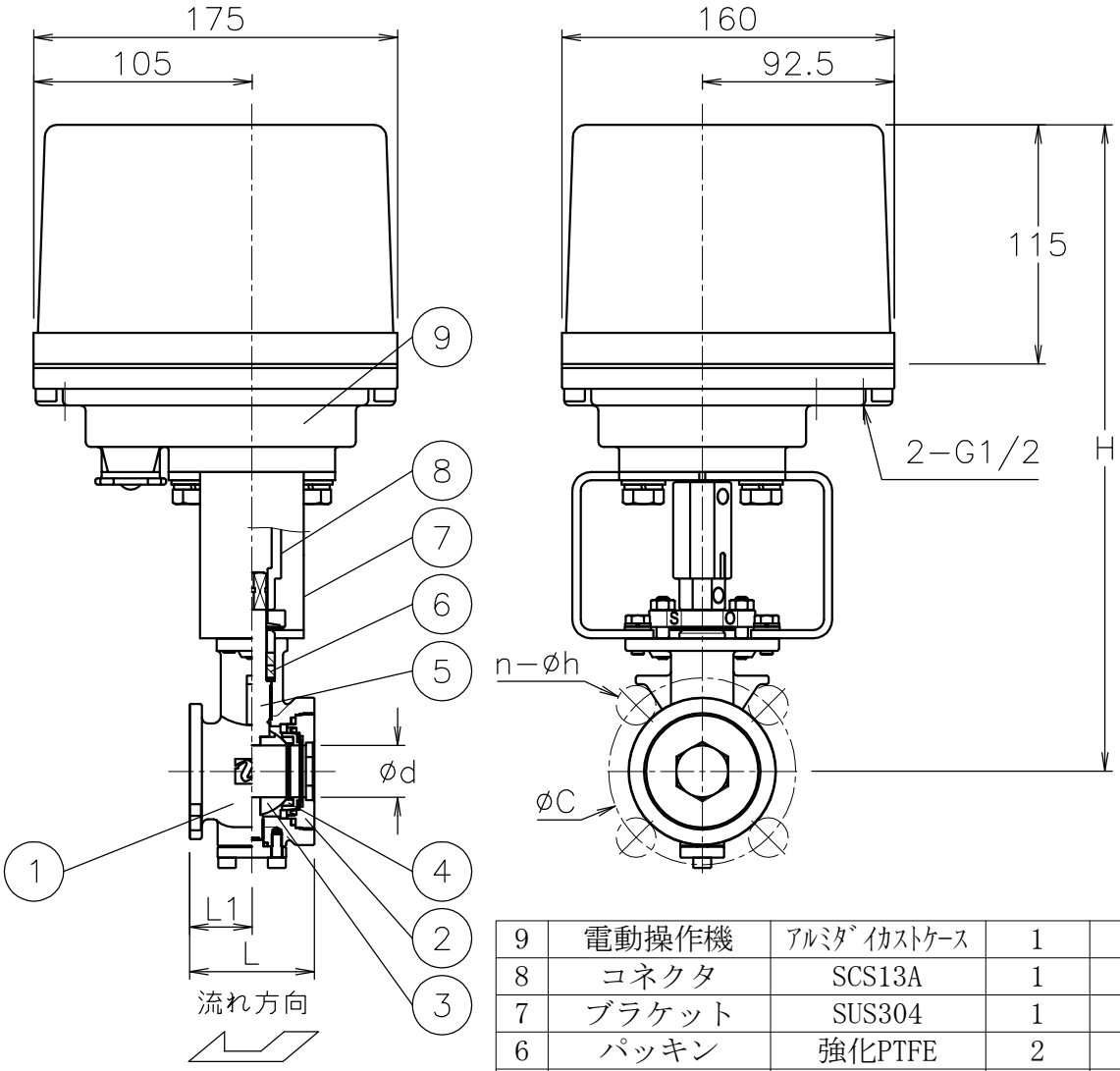


| No | DESCRIPTION | MATERIALS | REQ'D | REMARKS |
|---|---|---|---|---|
| 9 | 電動操作機 | ｱﾙﾐﾀﾞｲｶｽﾄｹｰｽ | 1 | |
| 8 | コネクタ | SCS13A | 1 | |
| 7 | ブラケット | SUS304 | 1 | |
| 6 | パッキン | 強化PTFE | 2 | |
| 5 | ステム | SUS316 | 1 | |
| 4 | シート | 強化PTFE | 1 | |
| 3 | ボール | SCS14A | 1 | HCr PLTD |
| 2 | キャップ | SCS14A | 1 | |
| 1 | 本体 | SCS14A | 1 | |

NOTE
付属品
・ｹｰﾌﾞﾙｺﾈｸﾀ(ﾅｲﾛﾝ製),G1/2,適合ｹｰﾌﾞﾙφ6～12
・プラグ

| | | | | |
|---|---|---|---|---|
| | | | APPR'D | H.F |
| | | | CHK'D | K.Y |
| | | | DESIGN | |
| | | | DRAWN | S.O |
| MARK | DATE | BY | DATE | '17-03-07 |
| | REVISIONS | | | |
| MV-2592 | | | | |

| | | | |
|---|---|---|---|
| TITLE | J10K/20K ウエハー式<br>ＧＳ型コントロールバルブ | | |
| MODEL | PHXGS**3UUG PHRGS**3UUG PDXGS**3UUG | | |
| SCALE | NON | DWG No. | GS-*3UUG-PX10 |

NIPPON VALVE CONTROLS, INC.