| 口径 | d | L1 | L2 | D | C | n-h | H | 質量 (kg) | Cv値 | 操作機型式 | | | ﾗﾝｸ |
|---|---|---|---|---|---|---|---|---|---|---|---|---|---|
| 40 A | 50 | 38.5 | 35.5 | 146 | 105 | 4-19 | 326 | 6.8 | 75 | PHX-300 | PHR-300 | PDX-300 | 0 |
| 50 A | 57 | 42.5 | 38.5 | 163 | 120 | 4-19 | 333 | 7.1 | 123 | PHX-300 | PHR-300 | PDX-300 | 0 |
| 65 A | 70 | 46 | 44 | 182 | 140 | 4-19 | 344 | 7.4 | 267 | PHX-300 | PHR-300 | PDX-300 | 0 |
| 80 A | 80 | 46 | 43.5 | 198 | 150 | 8-19 | 346 | 7.6 | 368 | PHX-700 | PHR-700 | PDX-700 | 0 |
| 100 A | 103 | 56 | 54 | 227 | 175 | 8-19 | 368 | 8.6 | 487 | PHX-700 | PHR-700 | PDX-700 | 0 |
| 125 A | 129 | 68 | 62 | 257 | 210 | 8-23 | 416 | 12 | 845 | PHX-02K | PHR-02K | PDX-02K | 0 |
| 150 A | 150 | 70 | 65 | 285 | 240 | 8-23 | 432 | 13 | 1120 | PHX-02K | PHR-02K | PDX-02K | 0 |
| 200 A | 202 | 85 | 79 | 343 | 290 | 12-23 | 459 | 15 | 2340 | PHX-02K | PHR-02K | PDX-02K | 0 |

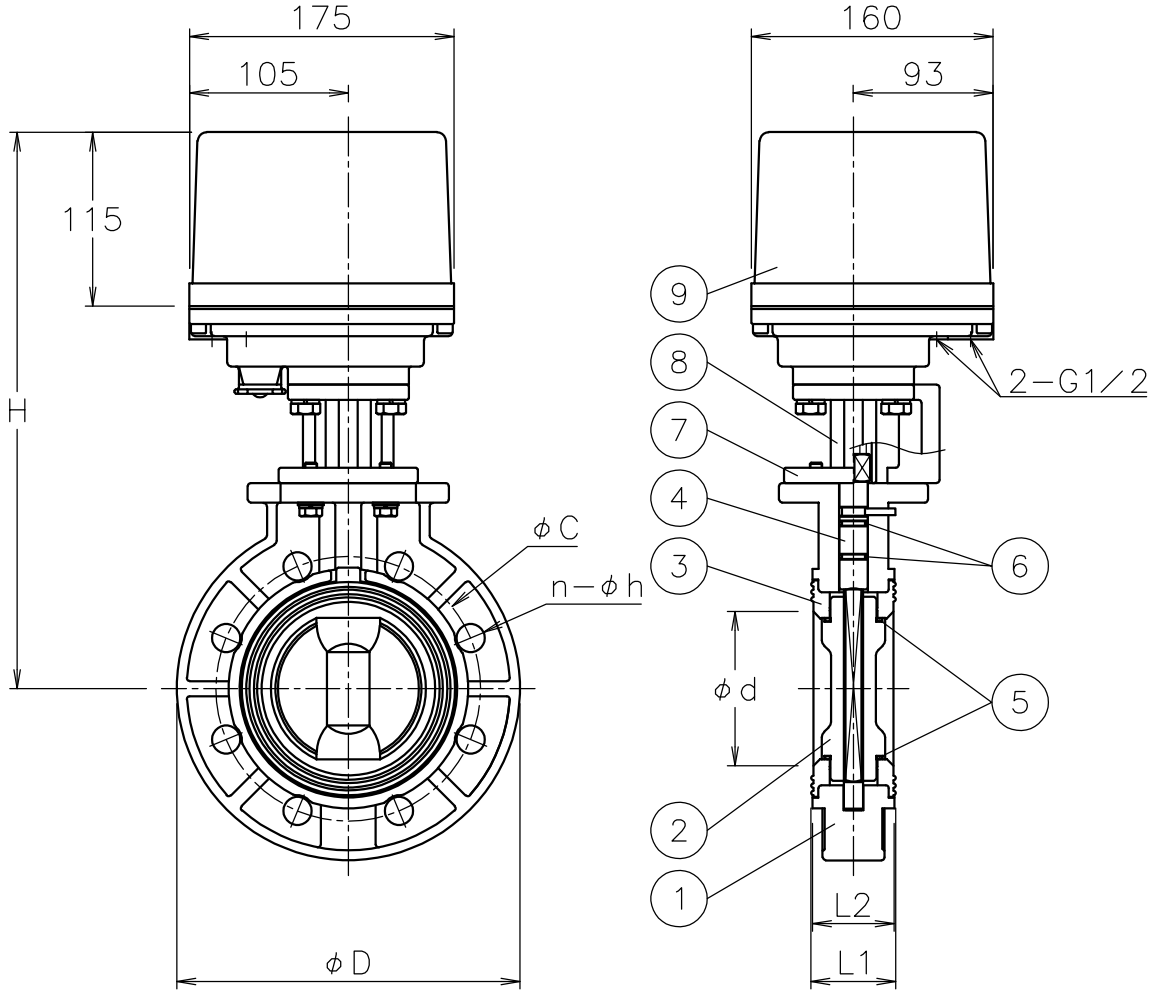


NOTE

付属品

・ｹｰﾌﾞﾙｺﾈｸﾀ(ﾅｲﾛﾝ製),G1/2,適合ｹｰﾌﾞﾙφ6～12

・プラグ

| No | DESCRIPTION | MATERIALS | REQ'D | REMARKS |
|---|---|---|---|---|
| 9 | 電動操作機 | ｱﾙﾐﾀﾞｲｶｽﾄｹｰｽ | 1 | |
| 8 | コネクタ | SCS13A | 1 | |
| 7 | ブラケット | SCS13A | 1 | |
| 6 | Oリング | EPDM | 2 | |
| 5 | Oリング | EPDM | 2 | |
| 4 | ステム | SUS410 | 1 | |
| 3 | シート | EPDM | 1 | |
| 2 | 弁体 | PP | 1 | |
| 1 | 本体 | PP | 1 | |

| | | | | |
|---|---|---|---|---|
| | | | APPR'D | H.F |
| | | | CHK'D | K.Y |
| | | | DESIGN | |
| | | | DRAWN | P.O |
| MARK | DATE | BY | DATE | '16-10-07 |

REVISIONS

MV-2546

| | | | |
|---|---|---|---|
| TITLE | Ｊ１０Ｋウエハー式 口径: 40～200 A<br>ＦＰ型コントロールバルブ | | |
| MODEL | PHXFP*01QQE PHRFP*01QQE PDXFP*01QQE | | |
| SCALE | NON | DWG No. | FP-01QQE-PXA5 |

NIPPON VALVE CONTROLS, INC.

| 口径 | d | L1 | L2 | D | C | n-h | H | 質量 (kg) | Cv値 | 操作機型式 | | | ﾗﾝｸ |
|---|---|---|---|---|---|---|---|---|---|---|---|---|---|
| 200 A | 202 | 85 | 79 | 343 | 290 | 12-23 | 500 | 21 | 2340 | PHX-06K | PHR-06K | PDX-06K | 2 |
| 250 A | 255 | 109 | 104 | 409 | 355 | 12-25 | 536 | 24 | 3580 | PHX-06K | PHR-06K | PDX-06K | 0 |
| 300 A | 310 | 131.5 | 127 | 487 | 400 | 16-25 | 594 | 30 | 5100 | PHX-06K | PHR-06K | PDX-06K | 1 |

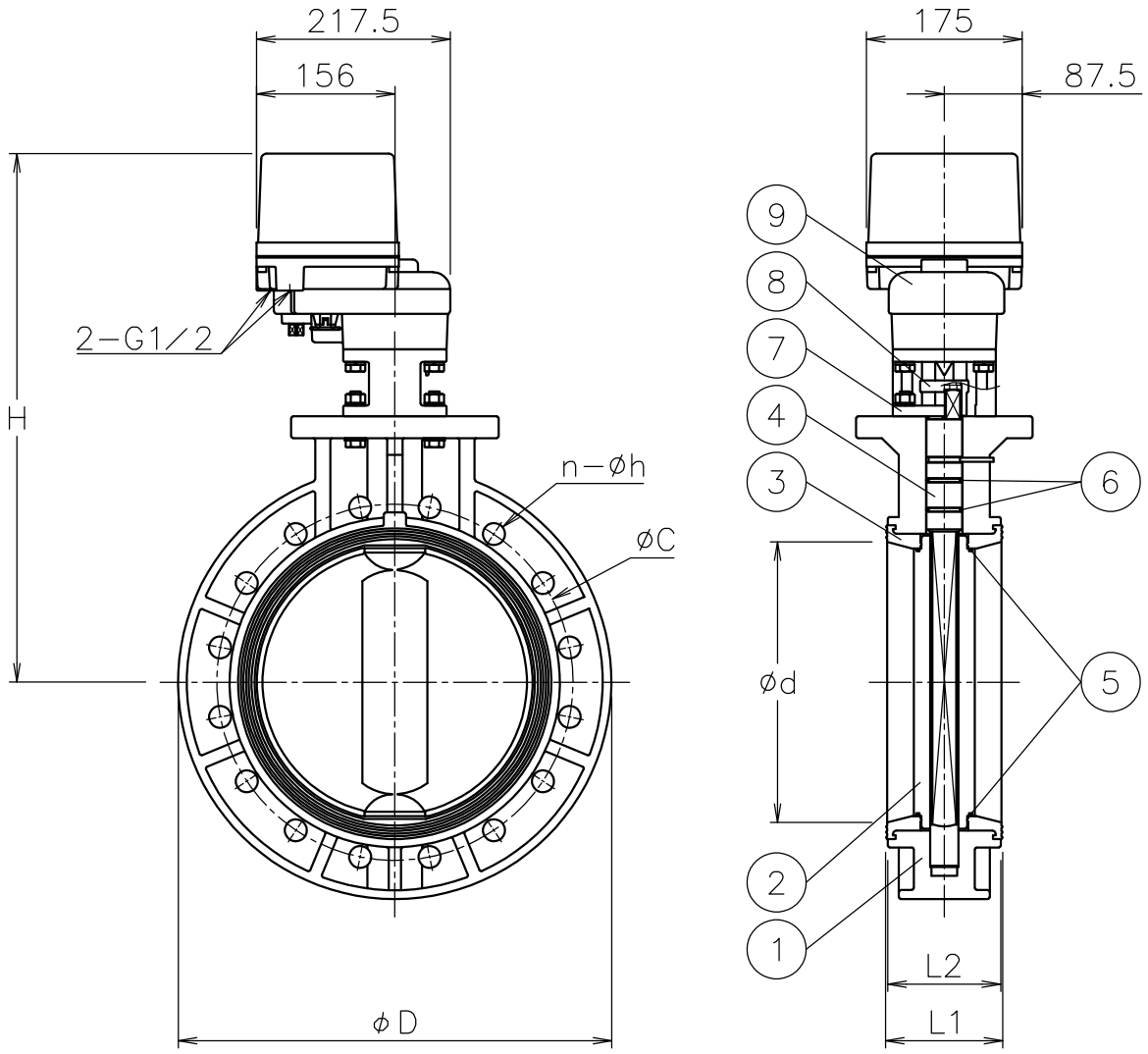


NOTE
付属品
・ｹｰﾌﾞﾙｺﾈｸﾀ(ﾅｲﾛﾝ製),G 1/2,適合ｹｰﾌﾞﾙφ6～12
・プラグ

| No | DESCRIPTION | MATERIALS | REQ'D | REMARKS |
|---|---|---|---|---|
| 9 | 電動操作機 | ｱﾙﾐﾀﾞｲｶｽﾄｹｰｽ | 1 | |
| 8 | コネクタ | SCS13A | 1 | |
| 7 | ブラケット | SCS13A | 1 | |
| 6 | Ｏリング | EPDM | 2 | |
| 5 | Ｏリング | EPDM | 2 | |
| 4 | ステム | SUS410 | 1 | |
| 3 | シート | EPDM | 1 | |
| 2 | 弁体 | PP | 1 | |
| 1 | 本体 | PP | 1 | |

| | | | | |
|---|---|---|---|---|
| | | | APPR'D | H.F |
| | | | CHK'D | K.Y |
| | | | DESIGN | |
| | | | DRAWN | P.O |
| MARK | DATE | BY | DATE | '16-10-07 |
| REVISIONS | | | | |
| MV-2546 | | | | |

| | | | |
|---|---|---|---|
| TITLE | Ｊ１０Ｋウエハー式 口径: 200～300A<br>ＦＰ型コントロールバルブ | | |
| MODEL | PHXFP**1QQE PHRFP**1QQE PDXFP**1QQE | | |
| SCALE | NON | DWG No. | FP-*1QQE-PXB5 |

NIPPON VALVE CONTROLS, INC.