| 呼び径 | d | L | L1 | D | C | n-h | H | 質量 (kg) | 操作機型式 | | | ﾗﾝｸ |
|---|---|---|---|---|---|---|---|---|---|---|---|---|
| 15 A | 13 | 108 | 45 | 95 | 70 | 4-15 | 281 | 8.4 | AD1-300 | AD2-300 | AD0-300 | 0 |
| 20 A | 19 | 117 | 50 | 100 | 75 | 4-15 | 285 | 9 | AD1-300 | AD2-300 | AD0-300 | 0 |
| 25 A | 25 | 127 | 51 | 125 | 90 | 4-19 | 296 | 11 | AD1-300 | AD2-300 | AD0-300 | 0 |
| | | | | | | | | | AD1-700 | AD2-700 | AD0-700 | 2 |
| 32 A | 38 | 165 | 70.5 | 135 | 100 | 4-19 | 321 | 14 | AD1-300 | AD2-300 | AD0-300 | 0 |
| | | | | | | | | | AD1-700 | AD2-700 | AD0-700 | 2 |
| 40 A | 38 | 165 | 70.5 | 140 | 105 | 4-19 | 321 | 14 | AD1-300 | AD2-300 | AD0-300 | 0 |
| | | | | | | | | | AD1-700 | AD2-700 | AD0-700 | 2 |
| 50 A | 51 | 178 | 80.5 | 155 | 120 | 4-19 | 329 | 16 | AD1-700 | AD2-700 | AD0-700 | 0 |
| 65 A | 64 | 190 | 87 | 175 | 140 | 4-19 | 368 | 22 | AD1-700 | AD2-700 | AD0-700 | 0 |

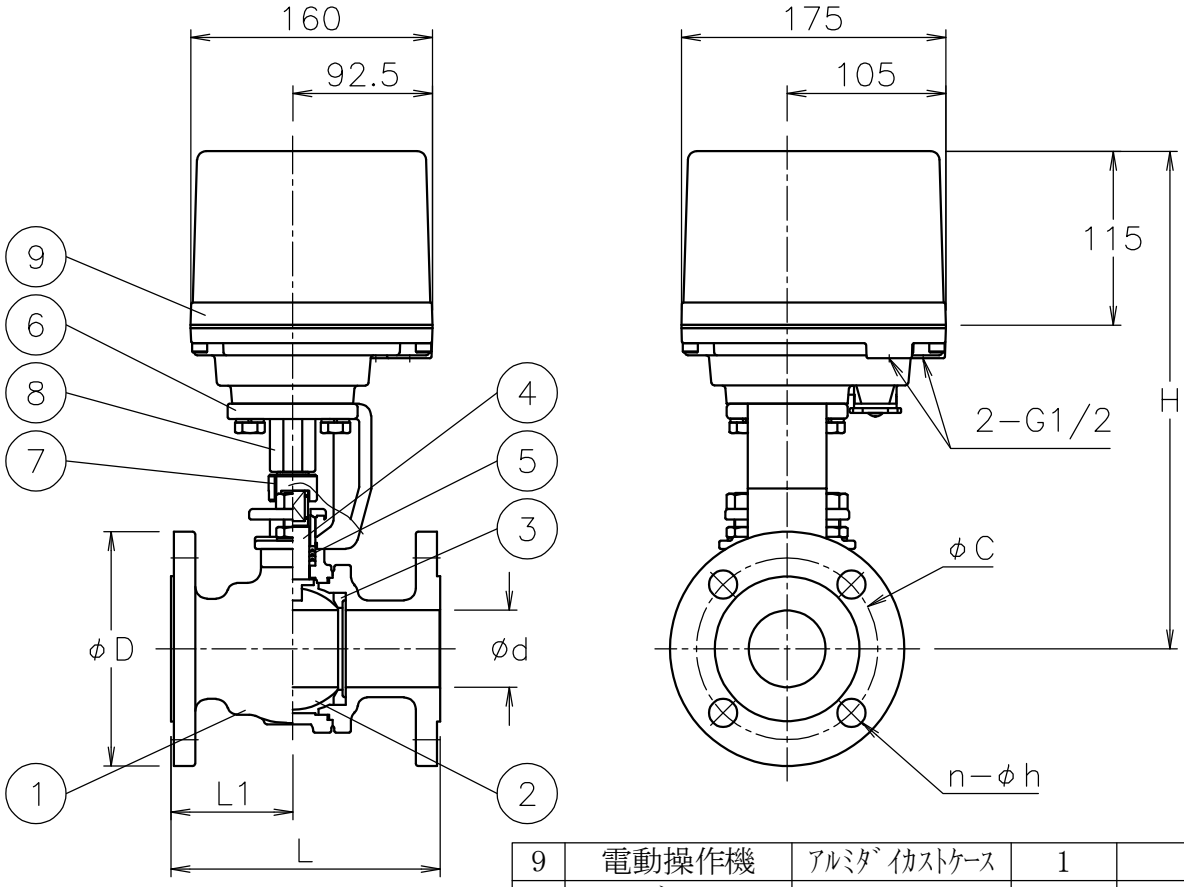


NOTE
付属品
・ｹｰﾌﾞﾙｺﾈｸﾀ(ﾅｲﾛﾝ製),G 1/2,適合ｹｰﾌﾞﾙφ6～12
・プラグ

| No | DESCRIPTION | MATERIALS | REQ'D | REMARKS |
|---|---|---|---|---|
| 9 | 電動操作機 | ｱﾙﾐﾀﾞｲｶｽﾄｹｰｽ | 1 | |
| 8 | コネクタ | SCS13A | 1 | |
| 7 | コネクタ | SUS304 | 1 | 065A |
| | | SCS13A | | 025～050A |
| | | S45C | | 015,020A |
| 6 | ブラケット | SCPH2 | 1 | |
| 5 | パッキン | N-PTFE | 1 | |
| 4 | ステム | SUS316 | 1 | |
| 3 | シート | 強化PTFE | 2 | |
| 2 | ボール | SUS316/SCS14A | 1 | |
| 1 | 本体 | SCS14A | 1 | |

| | | | | | | | | |
|---|---|---|---|---|---|---|---|---|
| | | | APPR'D | H.F | TITLE | J10Kフランジ式<br>ＢＦ型モータボールバルブ | | |
| | | | CHK'D | K.Y | | | | |
| | | | DESIGN | | MODEL | AD1BF**1UUG<br>AD2BF**1UUG | AD0BF0*1UUG | |
| | | | DRAWN | P.O | | | | |
| MARK | DATE | BY | DATE | '21-08-05 | SCALE | NON | DWG No. | BF-*1UUG-AD10 |
| REVISIONS | | | | | | | | |
| MV-2919 | | | | | | | | |

NIPPON VALVE CONTROLS, INC.