Size [mm]	d	L	L1	D	C	n-h	H	Weight [kg]	Cv	Actuator			Sizing code
25	25	127	72	125	90	4-19	308	11	28	PHX-300	PHR-300	PDX-300	0
								11		PHX-700	PHR-700	PDX-700	2
40	38	165	95	140	105	4-19	345	15	75	PHX-300	PHR-300	PDX-300	1
								15		PHX-700	PHR-700	PDX-700	0
50	51	178	103	155	120	4-19	350	16	153	PHX-700	PHR-700	PDX-700	0
65	64	190	110	175	140	4-19	394	22	250	PHX-700	PHR-700	PDX-700	1
							416	24		PHX-02K	PHR-02K	PDX-02K	0
80	76	203	113	185	150	8-19	421	25	350	PHX-02K	PHR-02K	PDX-02K	0
100	102	229	123	210	175	8-19	461	33	540	PHX-02K	PHR-02K	PDX-02K	1
							459	40		PHX-06K	PHR-06K	PDX-06K	0

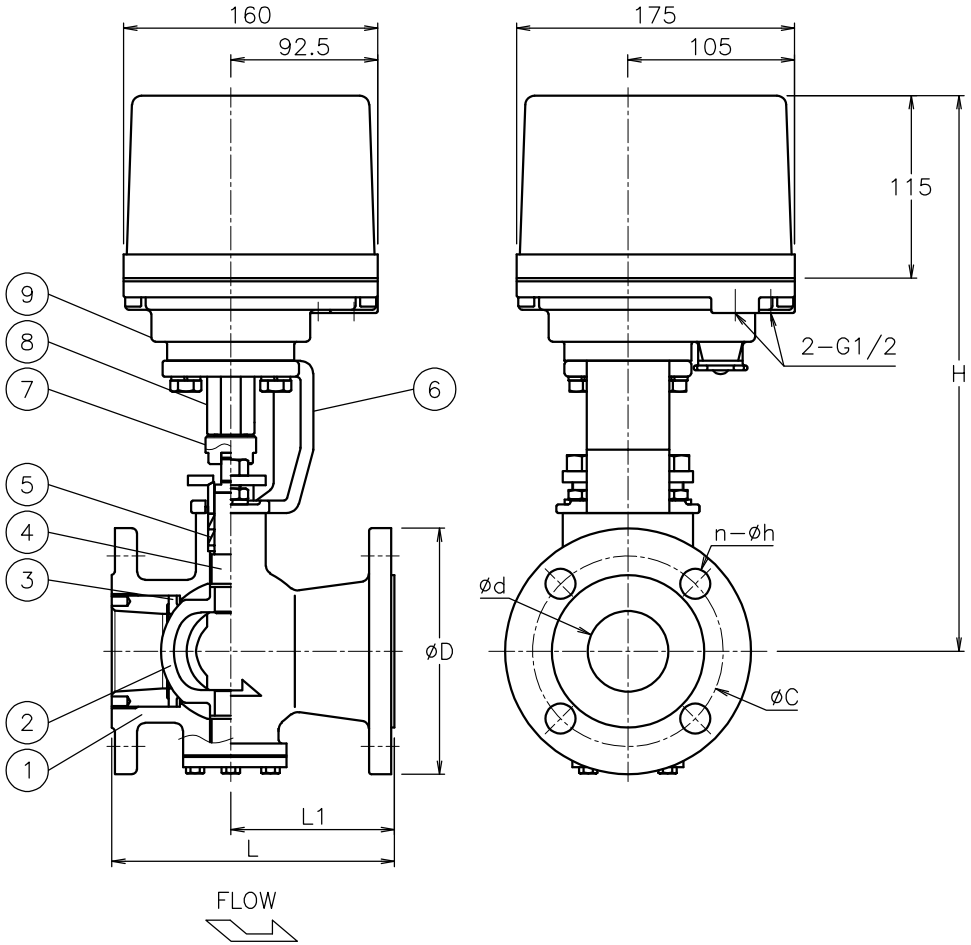

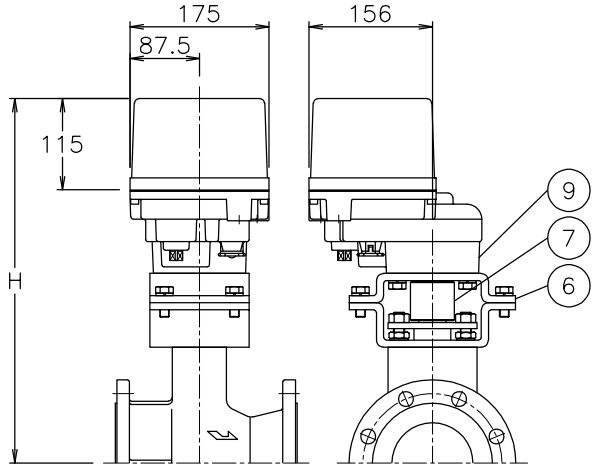

PHX (PHR, PDX) V−*01DUG−100

No	DESCRIPTION	MATERIALS	REQ'D	REMARKS
9	Actuator		1	
8	Joint	SCS13A	1	
7	Joint	SUSXM7/LAK52	1	100A(Sizing code 0)
		SUS304		065,080A 100A(Sizing code 1)
		SCS13A		025～050A
6	Bracket	SCPH2/SS400	1	100A
		SCPH2		025～080A
5	Packing	PTFE	1	
4	Stem	SUS316	1	
3	Seat	R-PTFE	1	
2	Ball	SCS11	1	HCr PLTD
1	Body	FCD-S	1	NC

NOTE
Actuator material: Aluminum alloy diecast cover.

ATTACHMENT
Cable gland (nylon), G 1/2, for 6φ to 12φ cable.
Plug.

			APPR'D	K.Y	TITLE	J10K Flanged-end V type electric actuated control valve		
			CHK'D	K.Y				
			DESIGN		MODEL	PHXV-**1DUG PHRV-**1DUG	PDXV-**1DUG	
			DRAWN	P.O				
MARK	DATE	BY	DATE	'23-11-17	SCALE	NON	DWG No.	V-*1DUG-PXA13-EN
REVISIONS			NIPPON VALVE CONTROLS, INC.					
MV-3039								