Valve DN	S	d	L	H1	H	Weight (kg)	Cv ON/OFF	Actuator		Sizing code
15 A	Rc 1/2	8.5	58.2	29	112	0.5	3	PSO-03S	PSC-03S	0
20 A	Rc 3/4	11.5	60	32	123	0.8	6	PSO-03D	PSC-03D	0
25 A	Rc 1	15	73.5	39	126	0.9	9	PSO-03D	PSC-03D	0

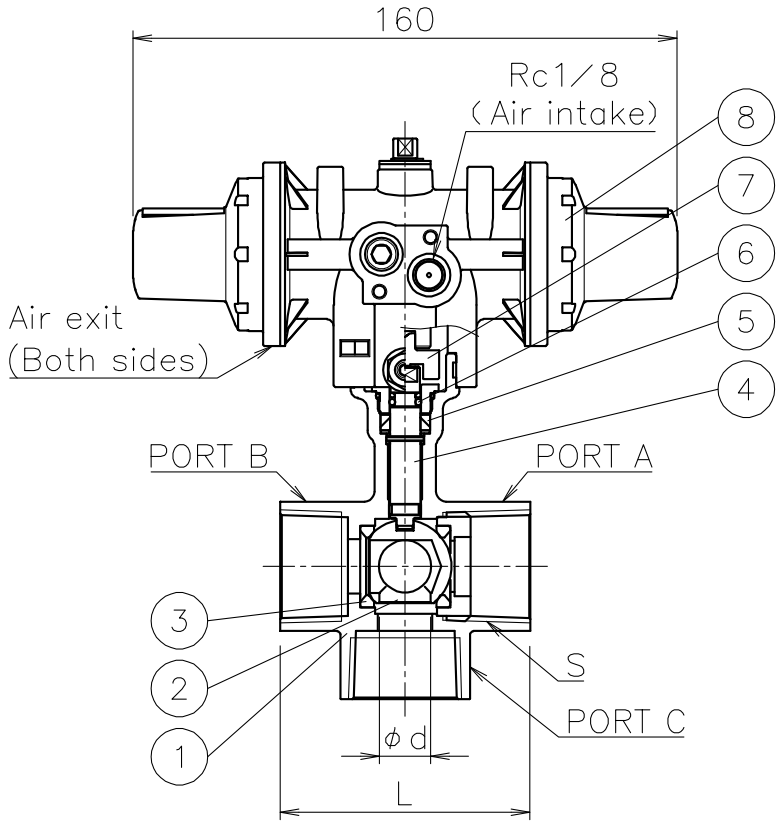

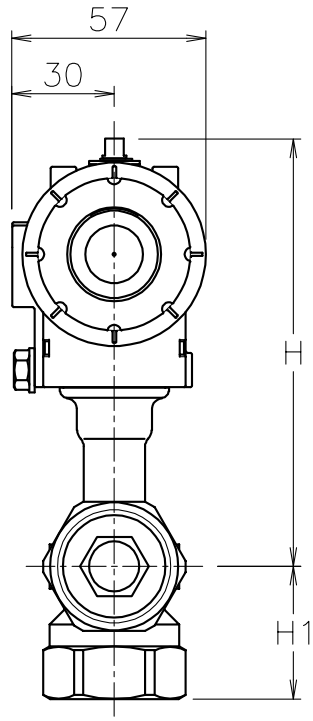

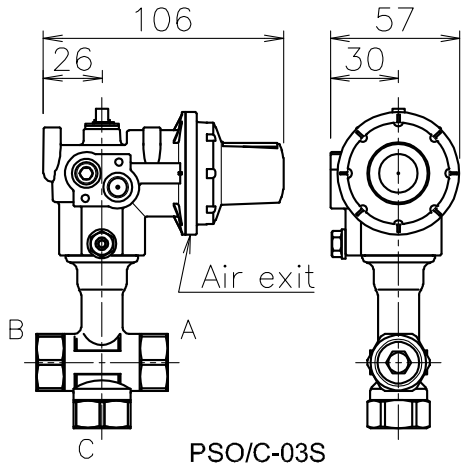

PSO/C-03S

NOTE

1. Air supply : 0.4~0.5 Mpa max 0.7 Mpa
2. Actuator operation
   - PSO serise ・Air to intake port : Position 2
     ・Spring return : Position 1
   - PSC serise ・Air to intake port : Position 1
     ・Spring return : Position 2
3. Coupling OD must be less than φ14.5

Flow paths

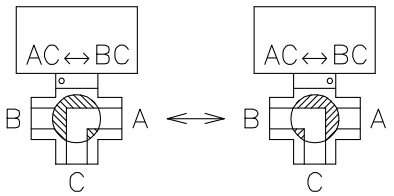

No	DESCRIPTION	MATERIALS	REQ'D	REMARKS
8	Actuator	PPS body	1	PSO/C
7	Joint	SUS304	1	
6	O-ring	FKM	1	
5	Packing	PTFE	1	
4	Stem	SUS304	1	
3	Seat	R-PTFE	2	
2	Ball	SUS304	1	
1	Body	SCS13A	1	

			APPR'D	K.Y	TITLE	Valve DN: 15~25 A Threaded End Rc (single-acting type) TE type pneumatic actuated 3 way ball valve		
			CHK'D	K.Y				
			DESIGN					
			DRAWN	T.A	MODEL	PSOTE905TTP		PSCTE905TTP
MARK	DATE	BY	DATE	'22-12-09	SCALE	NON	DWG No.	TE-905TTP-DA1-EN
REVISIONS			NIPPON VALVE CONTROLS, INC.					
MV-2987								