Flow paths and option code (Top views of valve)

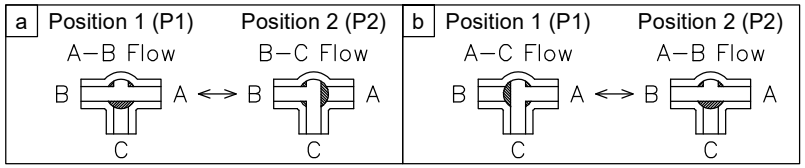

This valve has 2 flow paths a and b.
Specify the flow path with the option code.

Size [mm]	d	L	L1	d1	1/T	ℓ	h1	h2	H	Weight [kg]	Cv		Actuator		Sizing code
											L flow	Straight flow			
15	11	129	65	22.3	1/34	24	36	58	141	1.6	4	7	AM1-070	AM2-070	0
20	16	151	76	26.3	1/34	28	36	58	145	1.7	8	14	AM1-070	AM2-070	0
25	20	175	88	32.4	1/34	32	53	85	202	2.5	14	24	AM1-180	AM2-180	0

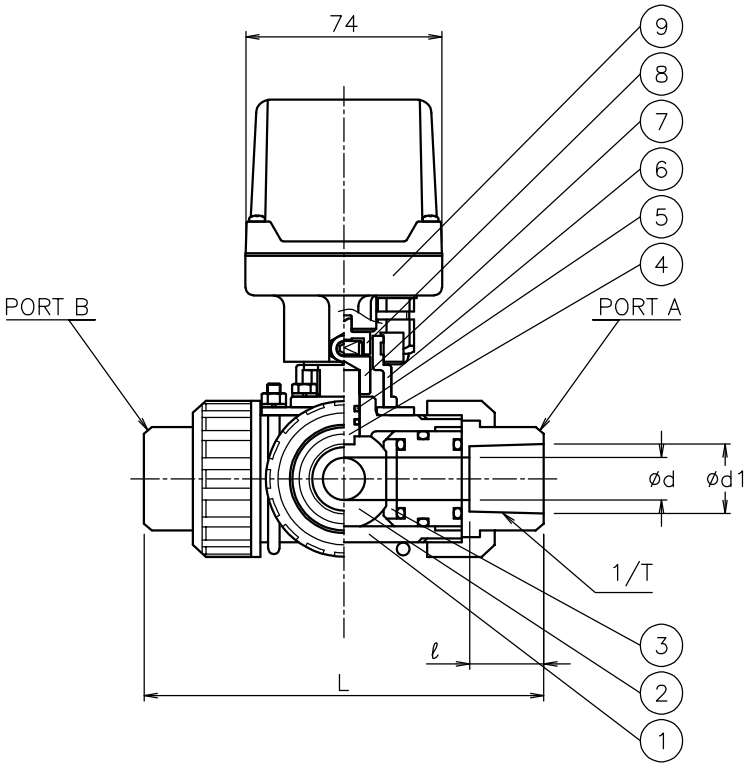

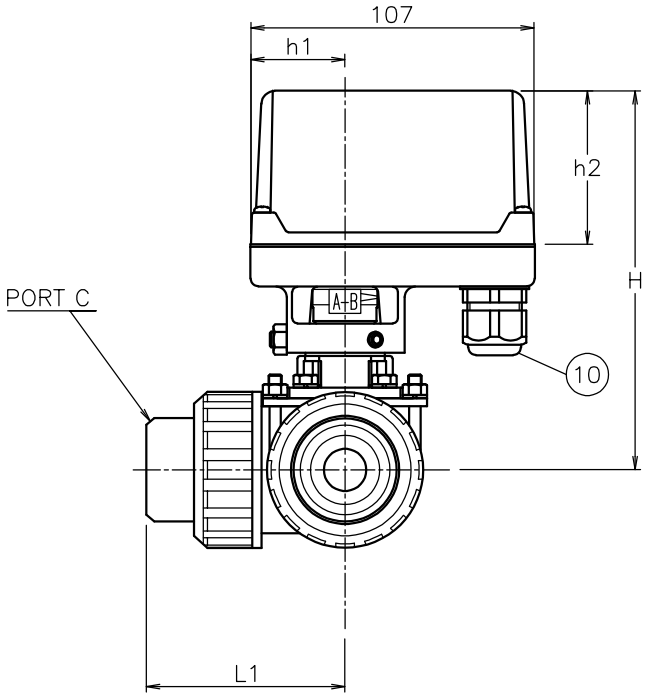

NOTE
(a) Cable acceptance 5φ to 10.5φ mm.

No	DESCRIPTION	MATERIALS	REQ'D	REMARKS
10	Cable gland	NYLON 6	1	G3/8 (a)
9	Actuator	ADC12/PC Cover	1	
8	Joint	SUS304	1	
7	Joint	C3604BD	1	
6	Bracket	SCS13A	1	
5	O-ring	EPDM	2	
4	Stem	PVC	1	
3	Seat	PTFE	4	
2	Ball	PVC	1	
1	Body	PVC	1	

			APPR'D	H.F	TITLE	Socket-end TP type motorized ball valve		
			CHK'D	K.Y				
			DESIGN		MODEL	AM1TP*07PPE AM2TP*07PPE		
			DRAWN	S.O				
MARK	DATE	BY	DATE	'21-12-27	SCALE	NON	DWG No.	TP-07PPE-AM7-EN
REVISIONS								
MV-2948					NIPPON VALVE CONTROLS, INC.			