Size [mm]	S	d	D1	ℓ	L	H1	X	M	S1	W1	W2	W3	W4	W5	H	Weight [kg]	Cv	Actuator		Sizing code
15	Rc 1/2	15	48	15	102	29	19	7.3	11	90	46	76	39	44.5	110	0.8	14	CM1-030	CM2-030	0
20	Rc 3/4	20	60	17	120	35	19	7.3	11	105	55	96	48	61	137	1.2	29	CM1-070	CM2-070	0
25	Rc 1	25	70	20	131	39	19	7.3	11	105	55	96	48	61	144	1.3	47	CM1-070	CM2-070	0
32	Rc1 1/4	32	82	22	150	47	30	9	15	105	55	96	48	61	161	1.7	72	CM1-070	CM2-070	0

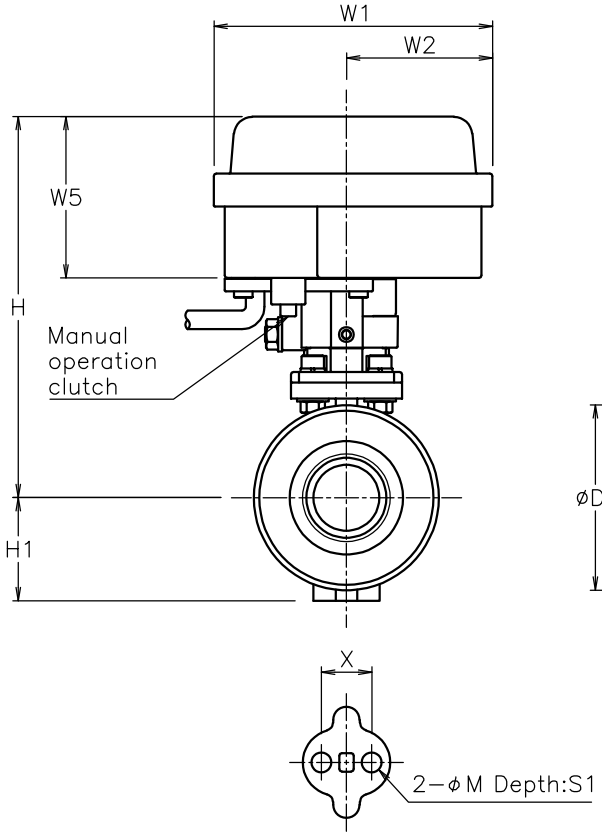

(for Ensat)

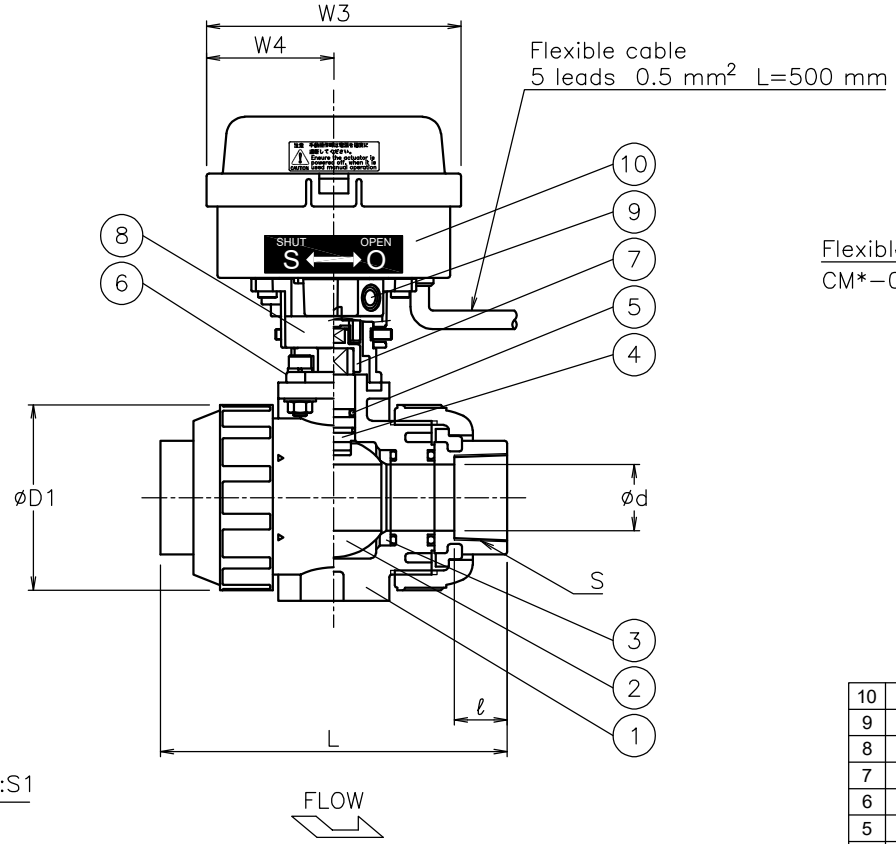

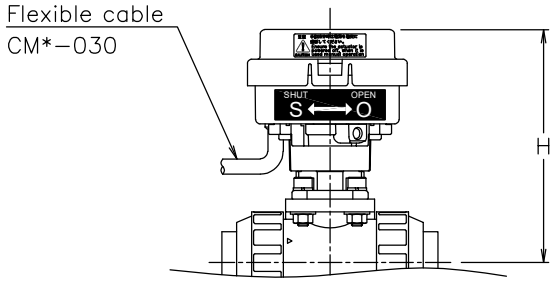

CM*PA*05PPV-015

No	DESCRIPTION	MATERIALS	REQ'D	REMARKS
10	Actuator	PC Case	1	
9	Joint	PPS	1	
8	Bracket	PPS	1	
7	Joint	SCS13A	1	
6	Bracket	SCS13A	1	
5	O-ring	FKM	2	
4	Stem	PVC	1	
3	Seat	PTFE	2	
2	Ball	PVC	1	
1	Body	PVC	1	

NOTE

For manual operation on CM*-070, press the clutch button while operating it.

			APPR'D	H.F	TITLE	Threaded End Rc PA type motorized ball valve		
			CHK'D	K.Y				
			DESIGN		MODEL	CM1PA*05PPV CM2PA*05PPV		
			DRAWN	S.O				
MARK	DATE	BY	DATE	'22-06-13	SCALE	NON	DWG No.	PA-05PPV-CD4-EN
REVISIONS			NIPPON VALVE CONTROLS, INC.					
MV-2969								