Size [mm]	S	d	D1	ℓ	L	H1	X	M	S1	W1	W2	W3	W4	W5	H	Weight [kg]	Cv	Actuator		Sizing code
15	Rc 1/2	15	48	15	102	29	19	7.3	11	122	60	145	60	102	195	2.8	14	AE1-120	AE2-120	0
20	Rc 3/4	20	60	17	120	35	19	7.3	11	122	60	145	60	102	202	2.9	29	AE1-120	AE2-120	0
25	Rc 1	25	70	20	131	39	19	7.3	11	122	60	145	60	102	209	3.1	47	AE1-120	AE2-120	0
32	Rc1 1/4	32	82	22	150	47	30	9	15	122	60	145	60	102	218	3.2	72	AE1-120	AE2-120	0
40	Rc1 1/2	40	100	25	163	55	30	9	15	122	60	145	60	102	226	3.8	155	AE1-120	AE2-120	0
50	Rc 2	51	126	28	197	66	30	9	15	122	60	145	60	102	238	5.2	190	AE1-300	AE2-300	0
65	Rc2 1/2	65	133	32	215	72	48	9	6	122	60	145	60	102	258	5.9	365	AE1-300	AE2-300	0
															274	5.9		AE1-600	AE2-600	2
80	Rc 3	78	152	35	265	85	55	11	7	122	60	145	60	102	283	7.4	410	AE1-600	AE2-600	0
100	Rc 4	100	210	45	362	110	65	11	8	122	60	145	60	102	324	14	680	AE1-600	AE2-600	0
										160	97	175	63	115	373	20		AE1-02K	AE2-02K	2

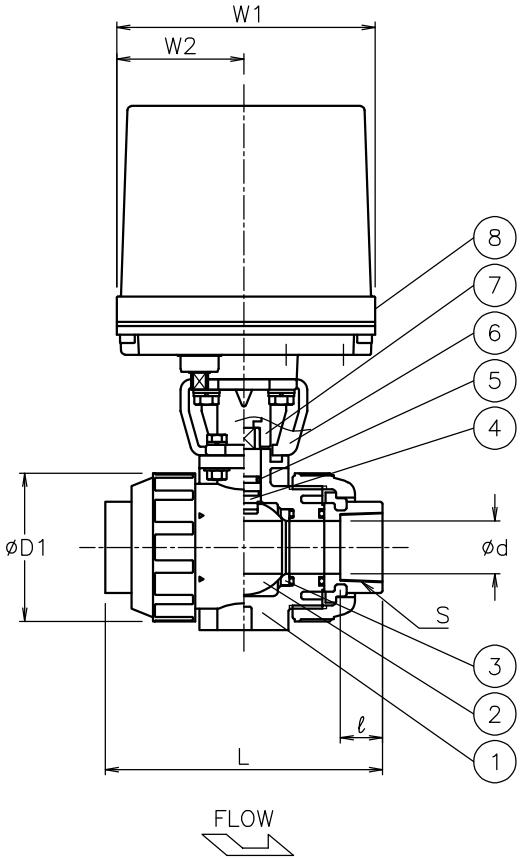

More than Size 65
do not have a flow mark.

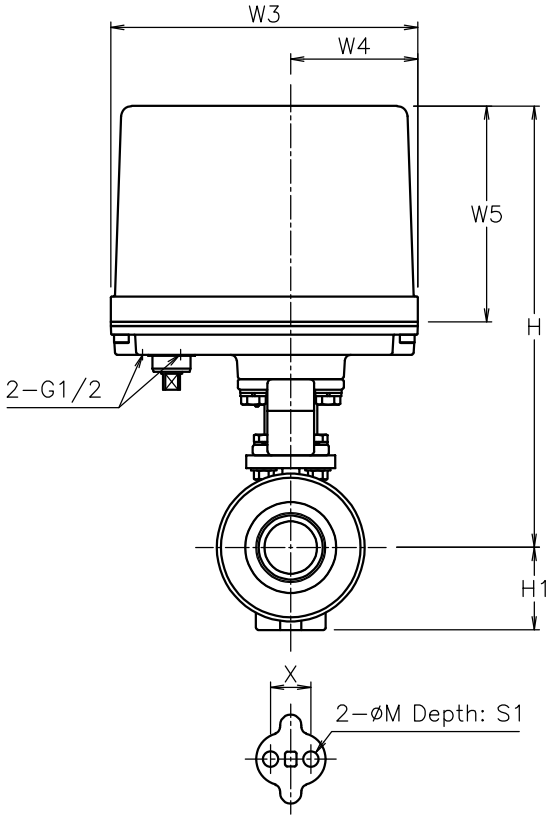

(for Ensat)

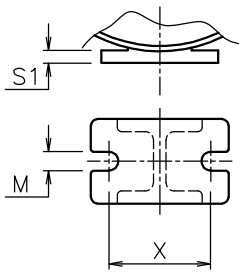

Valve size: 65 to 100

NOTE
(a) Heat-resistant PVC

ATTACHMENT
Cable gland (nylon), G1/2, for 6φ to 12φ cable.
Plug.

No	DESCRIPTION	MATERIALS	REQ'D	REMARKS
8	Actuator		1	
7	Joint	SCS13A/SUS303	1	
6	Bracket	SCS13A/SUS304	1	
5	O-ring	FKM	2	
4	Stem	C-PVC	1	(a)
3	Seat	PTFE	2	
2	Ball	C-PVC	1	(a)
1	Body	C-PVC	1	(a)

			APPR'D	H.F	TITLE	Threaded End Rc PA type electric actuated ball valve		
			CHK'D	K.Y				
			DESIGN		MODEL	AE1PA**5HHV AE2PA**5HHV		
			DRAWN	S.O				
MARK	DATE	BY	DATE	'21-03-30	SCALE	NON	DWG No.	PA-*5HHV-AE4-EN
REVISIONS								
MV-2895					NIPPON VALVE CONTROLS, INC.			