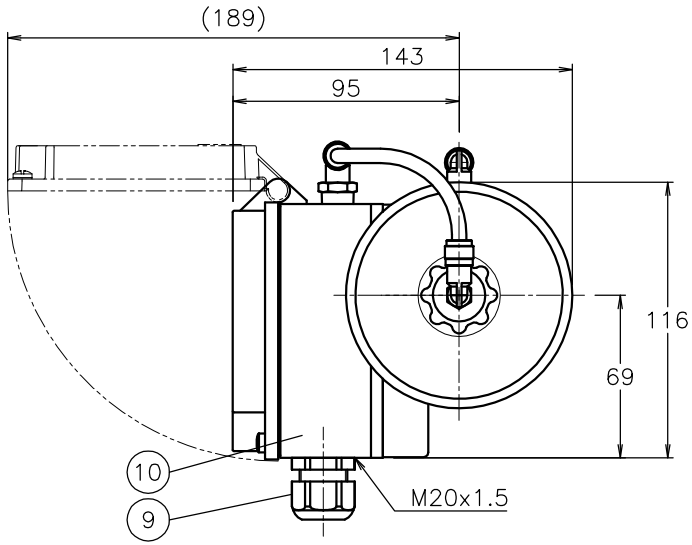

Product Code	Valve characteristics	Cv	Size [mm]	S	d	L	H	X	Weight [kg]	Actuator
PLCNS905UUF S 0 10 - EX	Linear	0.05	10	Rc 3/8	4	56	198	18	1.9	PLC-070
PLCNS905UUF S 0 15 - EX			15	Rc 1/2						
PLCNS905UUF M 0 10 - EX	Linear	0.13	10	Rc 3/8						
PLCNS905UUF M 0 15 - EX			15	Rc 1/2						
PLCNS905UUF L 0 10 - EX	Linear	0.34	10	Rc 3/8						
PLCNS905UUF L 0 15 - EX			15	Rc 1/2						
PLCNS905UUF H 0 10 - EX	Linear	0.8	10	Rc 3/8	6.5					
PLCNS905UUF H 0 15 - EX			15	Rc 1/2						
PLCNS905UUF X 0 15 - EX	Linear	2	15	Rc 1/2	9.5	56	209	23	2	PLC-070
PLCNS905UUF X E 15 - EX	Equal percentage									

SPECIFICATION

Option code		EX		
Manufacturer		SAMSON 3725		
Supply air		0.4 to 0.7 MPa		
Input signal		4 to 20 mA		
Operation	Mode	4mA	20mA	Spring return
	E	SHUT	OPEN	OPEN
	T	OPEN	SHUT	OPEN
Hysteresis		≤ 0.3%		
Sensitivity		≤ 0.1%		
Transit time		Only for actuators with initialization time > 0.5s		
Air consumption		≤ 110 ℓ/h (SUP=0.6MPa)		
Air output capacity				
Actuator filled with air		Δ0.6MPa: 8.5 m³/h		
Actuator vented		Δ0.6MPa: 14 m³/h		
Temperature range		-10 to 50ºC		
Enclosure		IP66		

NOTE

(a) Cable acceptance 6φ to 12φ mm.

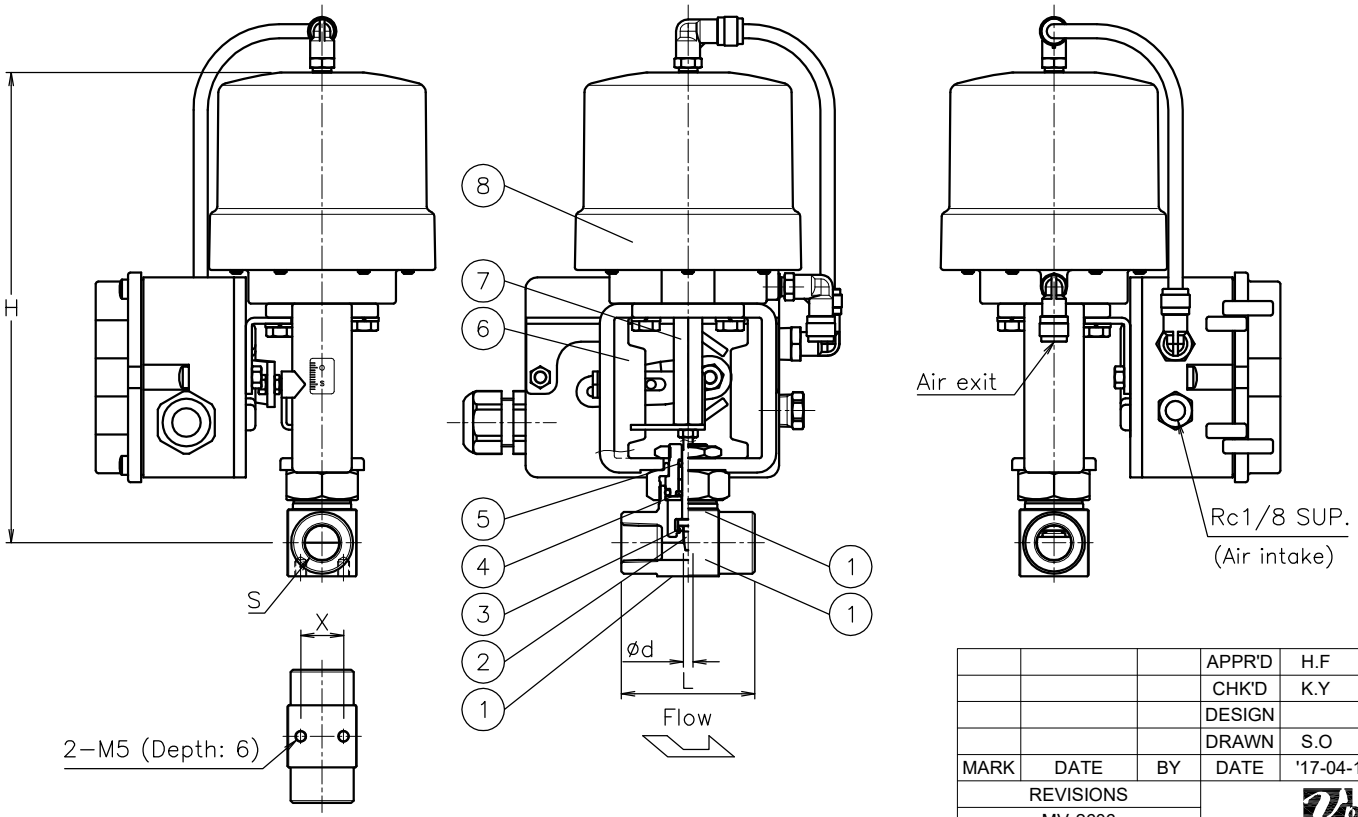

No	DESCRIPTION	MATERIALS	REQ'D	REMARKS
10	Positioner		1	EX
9	Cable gland		1	(a)
8	Actuator	PPS body	1	PLC-070
7	Shaft	SUS304	1	
6	Bracket	SUS304/SCS13A	1	
5	O-ring	FKM	2	
4	Packing	F-PTFE	1	
3	Seat	F-PTFE	1	
2	Trim	SUS316	1	
1	Body	SCS14A	1	

			APPR'D	H.F	TITLE	Threaded End Rc (single-acting type) NS type pneumatic actuated needle valve		
			CHK'D	K.Y				
			DESIGN		MODEL	PLCNS905UUF-EX-E PLCNS905UUF-EX-T		
			DRAWN	S.O				
MARK	DATE	BY	DATE	'17-04-12	SCALE	NON	DWG No.	NS-905UUF-EX-PC1-EN
REVISIONS								
MV-2606								

NIPPON VALVE CONTROLS, INC.