| 呼び径 | d | L | L1 | J10K | | J20K | | H | 質量(kg) | Cv値 | 操作機型式 | ﾗﾝｸ |
|---|---|---|---|---|---|---|---|---|---|---|---|---|
| | | | | C | n-h | C | n-h | | | | | |
| 15 A | 15 | 40 | 20 | 70 | 4-15 | 70 | 4-15 | 230 | 3.3 | 20 | PEX-300 | 2 |
| 20 A | 20 | 50 | 25 | 75 | 4-15 | 75 | 4-15 | 232 | 3.5 | 36 | PEX-300 | 2 |
| 25 A | 25 | 60 | 30 | 90 | 4-19 | 90 | 4-19 | 241 | 3.9 | 50 | PEX-300 | 2 |
| 32 A | 32 | 70 | 35 | 100 | 4-19 | 100 | 4-19 | 245 | 4.4 | 90 | PEX-300 | 0 |
| | | | | | | | | 261 | 4.8 | | PEX-700 | 2 |
| 40 A | 40 | 80 | 40 | 105 | 4-19 | 105 | 4-19 | 284 | 5.8 | 120 | PEX-700 | 2 |
| 50 A | 50 | 95 | 45 | 120 | 4-19 | 120 | 8-19 | 292 | 7.2 | 220 | PEX-700 | 0 |

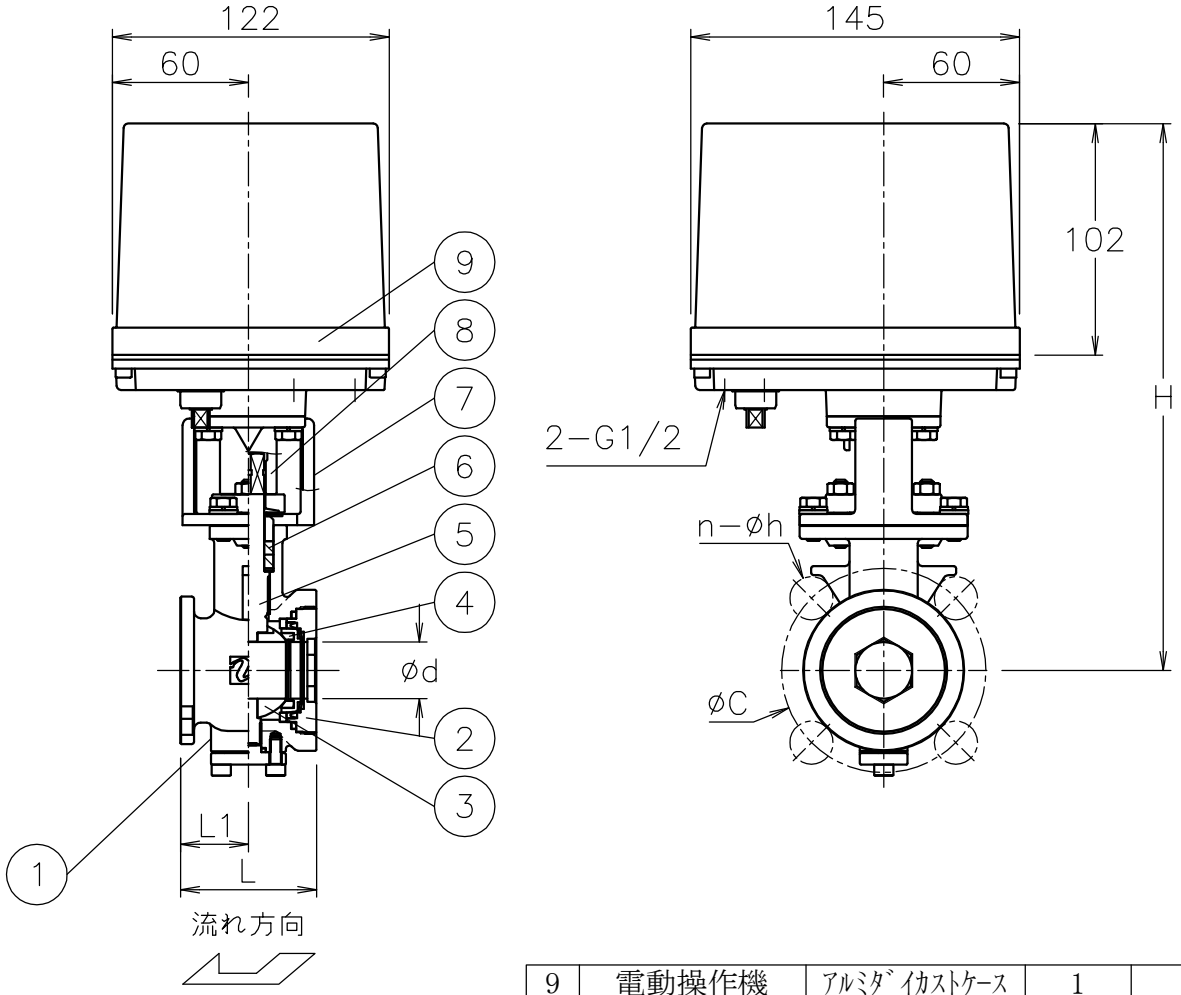


| No | DESCRIPTION | MATERIALS | REQ'D | REMARKS |
|---|---|---|---|---|
| 9 | 電動操作機 | ｱﾙﾐﾀﾞｲｶｽﾄｹｰｽ | 1 | |
| 8 | コネクタ | SUS304 | 1 | |
| 7 | ブラケット | SCS13A | 1 | |
| 6 | パッキン | 強化PTFE | 2 | |
| 5 | ステム | SUS316 | 1 | |
| 4 | シート | 強化PEEK | 1 | |
| 3 | ボール | SCS14A | 1 | HCr PLTD |
| 2 | キャップ | SCS14A | 1 | |
| 1 | 本体 | SCS14A | 1 | |

NOTE
付属品
・ｹｰﾌﾞﾙｺﾈｸﾀ(ﾅｲﾛﾝ製),G 1/2,適合ｹｰﾌﾞﾙφ6～12
・プラグ

| | | | | | | | | |
|---|---|---|---|---|---|---|---|---|
| | | | APPR'D | H.F | TITLE | J10K/20K ウェハー形<br>ＧＳ型コントロールバルブ | | |
| | | | CHK'D | K.Y | | | | |
| | | | DESIGN | | MODEL | PEXGS**3UUC | | |
| | | | DRAWN | S.O | | | | |
| MARK | DATE | BY | DATE | '18-09-14 | SCALE | NON | DWG No. | GS-*3UUC-PE2 |
| REVISIONS | | | NIPPON VALVE CONTROLS, INC. | | | | | |
| MV-2727 | | | | | | | | |